TAMCO

THAI SWITCHBOARD AND METAL WORK CO., LTD.

CE SERIES CATALOG

INNOVATIVE TECHNOLOGY
SUPERIOR QUALITY
COMPETITIVE PRODUCT PRICE

ANAB ACCREDITED
ISO/IEC 17021
MANAGEMENT SYSTEMS CERTIFICATION BODY
CERTIFIED ISO9001:2015

WWW.TAMCO.CO.TH

Enclosure IP Ratings Guide

The Code and Rating System

IP X X

Code Letters
(IP=Ingress Protection)

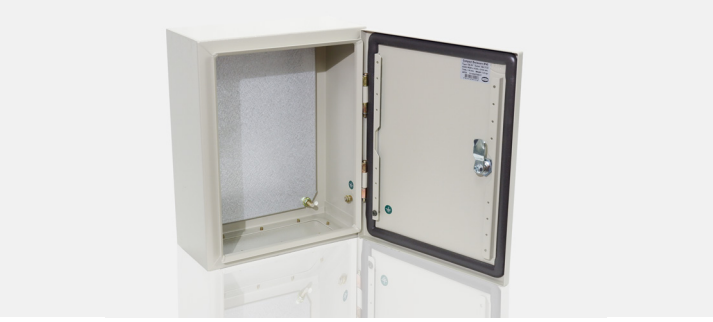

SOLIDS

First Number	Level of protection against solid objects, materials or dust
0	No Protection
1	Protected against a solid object greater than 50 mm. (2~in), such as a hand.
2	Protected against a solid object greater than 12.5 mm. (1/2in), such as a finger.
3	Protection against a solid object greater than 2.5 mm. such as a screwdriver.
4	Protection against a solid Object greater than 1.0 mm. such as a wire.
5	Dust proof. Dust must not penetrate to an extent that equipment operation or safety are impaired.
6	Dust-tight: No ingress of dust.

WATER

Second Number	Level of protection against water and other liquids
0	No Protection
1	Protected against vertically falling drops of water for 10 minutes at rate of 1 mm. /min.
2	Protected against diagonally falling(up to 15-deg.) drops of water for 10 minutes at rate of 3mm. /min.
3	Protected against diagonally falling(up to 60-deg.) spray (from a hose) for 5 minutes at 0.7 litres/min. at 80-100 kPa.
4	Protected against water splashed from all directions for 5 minutes at 10 litres/min at 80-100 kPa.
5	Protected against a 6.3 mm. water nozzle for 3 minutes at 12.5 litres/min. at 30 kPa at a distance of 3m.
6	Protected against at 12.5 mm. water nozzel for 3 minutes at 100 litres/min at 100kPa at a distance of 3m.
7	Protected against at 30 minutes submersion at a depth of 1m.
8	Protected against continuous submersion at a depth of 3m.

Example : TAMCO Compact Enclosure: IP 5 5

First Number: Protected from limited dust ingress.

Second Number: Protected from low pressure water jets from any direction.

Contents

Innovative Technology 1

Product Specification & Price Lists

- CE Series IP40 3
- CE Series IP55 5
- CES Series IP55 7
- CESG Series IP55 9
- CRS Series IP65 11
- CRSG Series IP65 13
- CE Stainless Series IP55 15
- CES Stainless Series IP55 17
- CESG Stainless Series IP55 19
- Enclosure Accessories 21

Other Products 27

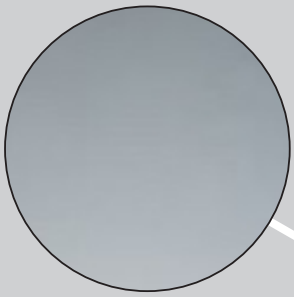

Electro-Galvanized Steel

• Provides higher corrosion resistance and higher performance.

• Long life – the life expectancy of electro-galvanized steel is around 20-30 years.

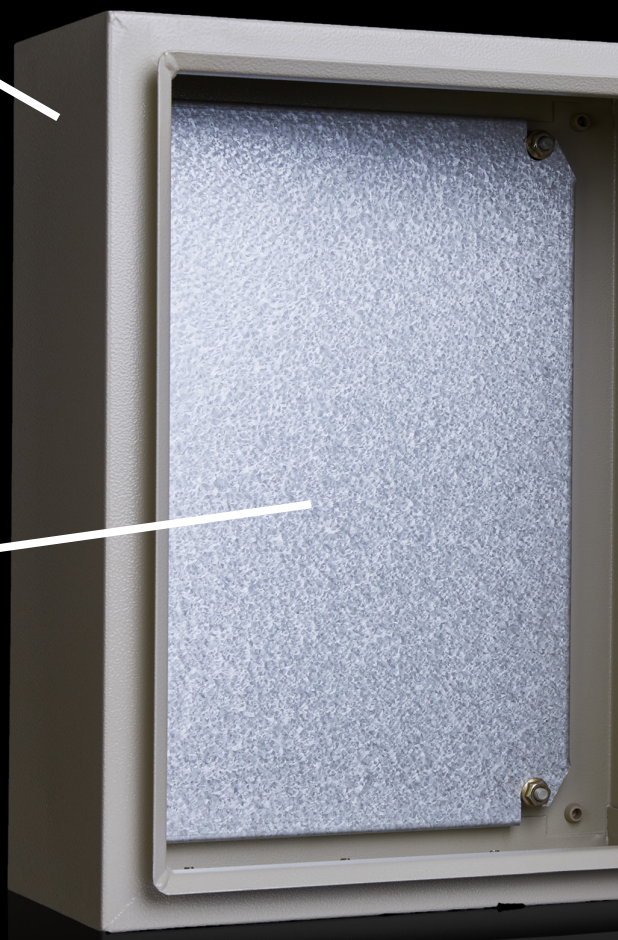

Aluminium-zinc steel as mounting plate

• Aluminium-zinc steel - with its mixture of Aluminium, Zinc and Silicon, it gives superior long term corrosion resistance.

• Ease of electrical components installation.

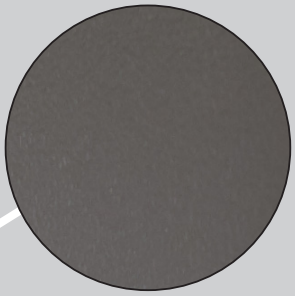

Fine and protective finished surface

• Polyester powder coating provides a long-lasting and more durable to the enclosure.

• Offering a greater protection from scratches, chipping, abrasions, corrosion, fading, and general wear.

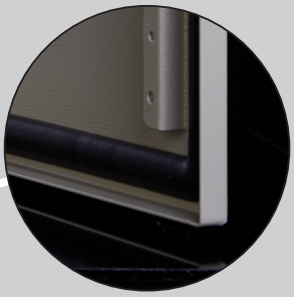

Optimum IP Protection

• PU gasket foam provides optimum protection against corrosive chemicals, high temperatures, and high pressures.

• Prevention of the external environment from entering an enclosure—such as dust, dirt, water, etc.

COMPACT ENCLOSURE : CE IP40

CE IP40 is suitable for indoor purposes that provides protection against a solid object greater than 1.0 mm. This series has 14 standard sizes to serve customer's requirement.

ตู้มาตรฐานรุ่นใหม่ CE เหมาะสำหรับการใช้งานภายในอาคาร สามารถกันน้ำกันฝุ่นได้ถึง IP-40 ตัวตู้พ่นสี Polyester ที่สามารถกันแสง UV ได้ มาพร้อมกับแผ่นเพลทเคลือบสังกะสี

Specification

Material	Electro-Galvanized Steel (EG)			Aluminium-Zinc Coated Steel (Aluzinc)
Size	Enclosure Frame	Door	Gland Plate	Mounting Plate
CE-01 to CE-11	1.2 mm.	1.5 mm.	1.2 mm.	1.5 mm.
CE-12 to CE-14	1.5mm.	1.5 mm.	1.5 mm.	2.0 mm.
Finished Surface	Polyester powder coated with UV protecton paint RAL-7032			Aluminium-Zinc Coated Steel (Aluzinc)
Protection Rating	IP40			
Supply Include	Gland plate / Door with PU gasket seal / Double bit lock with key			

COMPACT ENCLOSURE : CE IP40

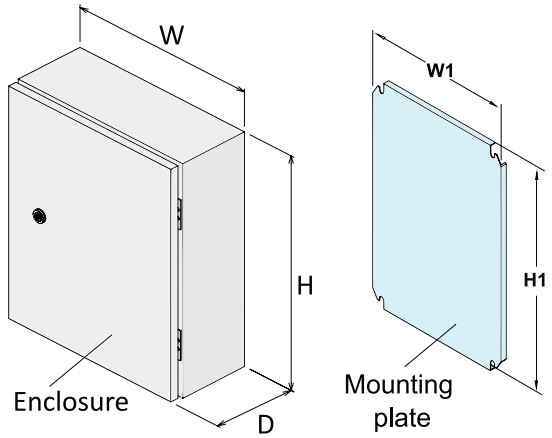

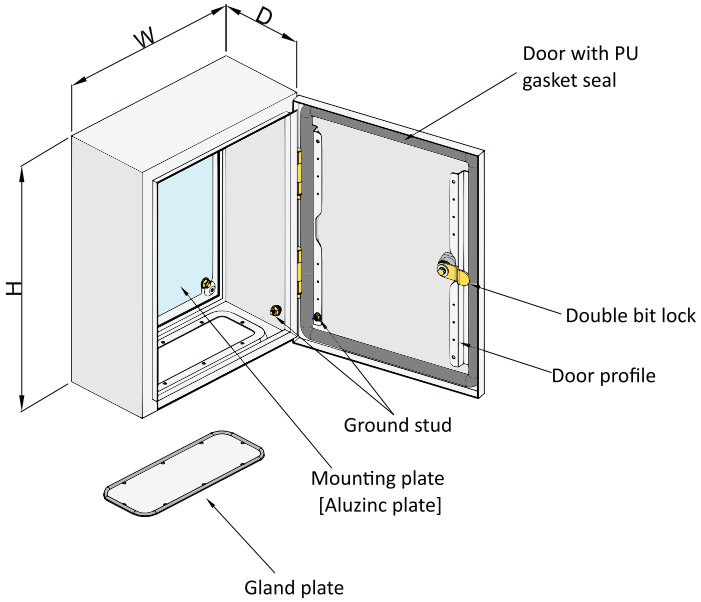

Price List

รุ่น Model	ขนาดตู้ Enclosure Dimensions			เพลทยึดอุปกรณ์ Mounting Plate (Aluzinc Plate)		จำนวนล็อค Door handle lock Qty.	น้ำหนักตู้ Approx. Weight (Kg.)	ราคาต่อหน่วย Unit Price (Baht)
	Width (W)	Height (H)	Depth (D)	Dimension (mm.) W1	H1			
CE-01	280	350	150	230	314	1	5.66	600.00
CE-02	300	450	150	250	414	1	7.28	830.00
CE-03	300	450	200	250	414	1	8.02	950.00
CE-04	350	450	200	300	414	1	8.96	1,000.00
CE-05	350	500	200	300	464	2	9.75	1,100.00
CE-06	400	500	200	350	464	2	10.78	1,200.00
CE-07	450	600	250	400	564	2	14.97	1,600.00
CE-08	500	600	250	450	564	2	16.20	1,750.00
CE-09	550	700	250	500	664	2	19.74	2,100.00
CE-10	630	750	250	580	714	2	23.26	2,450.00
CE-11	630	900	250	580	864	2	27.12	2,900.00
CE-12	700	1100	250	650	1064	2	40.96	4,400.00
CE-13	800	1200	300	750	1164	2	52.04	5,700.00
CE-14	900	1200	300	850	1164	2	57.30	6,300.00

Prices and availability of information are subjected to change without notice.

COMPACT ENCLOSURE : CE IP55

CE IP55 is a compact enclosure which protects electrical equipment from dust and water spray. With the polyurethane foam gasket, it provides excellent sealing which can provide a high IP rating. It is suitable for both indoor and outdoor purposes. Available in 14 standard sizes.

ตู้มาตรฐานรุ่นใหม่ CE สามารถกันน้ำกันฝุ่นได้ถึง IP-55 สามารถใช้ได้ทั้งงานภายในและนอกอาคาร ตัวตู้พ่นสี Polyester ที่สามารถกันแสง UV ได้ มาพร้อมกับแผ่นเพลทเคลือบสังกะสี

Specification

Material	Electro-Galvanized Steel (EG)			Aluminium-Zinc Coated Steel (Aluzinc)
Size	Enclosure Frame	Door	Gland Plate	Mounting Plate
CE-01 to CE-11	1.2 mm.	1.5 mm.	1.2 mm.	1.5 mm.
CE-12 to CE-14	1.5 mm.	1.5 mm.	1.5 mm.	2.0 mm.
Finished Surface	Polyester powder coated with UV protecton paint RAL-7032			Aluminium-Zinc Coated Steel (Aluzinc)
Protection Rating	IP55			
Supply Include	Gland plate and Door with PU gasket seal / Double bit lock with key			

COMPACT ENCLOSURE : CE IP55

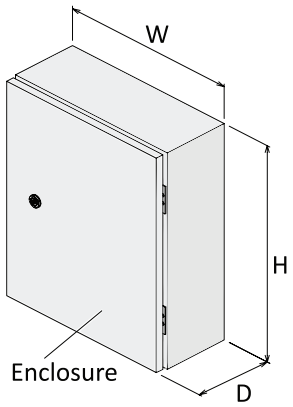

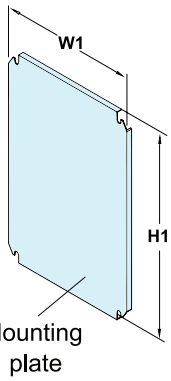

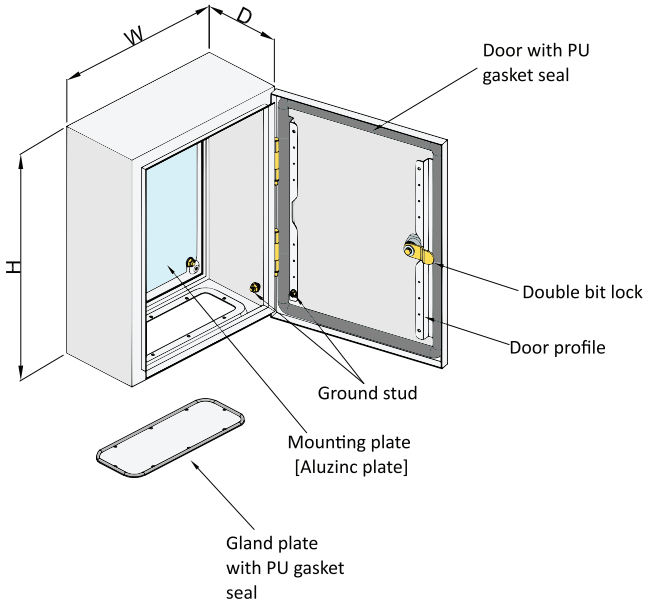

Price List

รุ่น Model	ขนาดตู้ Enclosure Dimensions			เพลทยึดอุปกรณ์ Mounting Plate (Aluzinc Plate)		จำนวนล็อค Door handle lock Qty.	น้ำหนักตู้ Approx. Weight (Kg.)	ราคาต่อหน่วย Unit Price (Baht)
	Width (W)	Height (H)	Depth (D)	Dimension (mm.) W1	H1			
CE-01	280	350	150	230	314	1	5.66	950.00
CE-02	300	450	150	250	414	1	7.28	1,250.00
CE-03	300	450	200	250	414	1	8.02	1,400.00
CE-04	350	450	200	300	414	1	8.96	1,500.00
CE-05	350	500	200	300	464	2	9.75	1,650.00
CE-06	400	500	200	350	464	2	10.78	1,800.00
CE-07	450	600	250	400	564	2	14.97	2,100.00
CE-08	500	600	250	450	564	2	16.20	2,400.00
CE-09	550	700	250	500	664	2	19.74	2,850.00
CE-10	630	750	250	580	714	2	23.26	3,300.00
CE-11	630	900	250	580	864	2	27.12	3,850.00
CE-12	700	1100	250	650	1064	2	40.96	7,300.00
CE-13	800	1200	300	750	1164	2	52.04	9,200.00
CE-14	900	1200	300	850	1164	2	57.30	10,100.00

Prices and availability of information are subjected to change without notice.

COMPACT ENCLOSURE: CES IP55

CES IP55. This compact enclosure comes with a canopy that provides extra prevention from the ingress of water spray. This series is suitable for outdoor purposes. Available in 14 standard sizes.

ตู้มาตรฐานรุ่นใหม่ CES มีหลังคาที่สามารถกันน้ำ และฝุ่นได้ถึง IP-55 เหมาะสำหรับงานติดตั้ง งานกลางแจ้ง และงานภายในอาคาร ตัวตู้พ่นสี Polyester ที่สามารถกันแสง UV ได้ มาพร้อมกับแผ่นเพลทเคลือบสังกะสี

Specification

Material	Electro-Galvanized Steel (EG)			Aluminium-Zinc Coated Steel (Aluzinc)
Size	Enclosure Frame	Door	Gland Plate	Mounting Plate
CES-01 to CES-11	1.2 mm.	1.5 mm.	1.2 mm.	1.5 mm.
CES-12 to CES-14	1.5 mm.	1.5 mm.	1.5 mm.	2.0 mm.
Finished Surface	Polyester powder coated with UV protecton paint RAL-7032			Aluminium-Zinc Coated Steel (Aluzinc)
Protection Rating	IP55			
Supply Include	Gland plate and Door with PU gasket seal / Double bit lock with key			

COMPACT ENCLOSURE: CES IP55

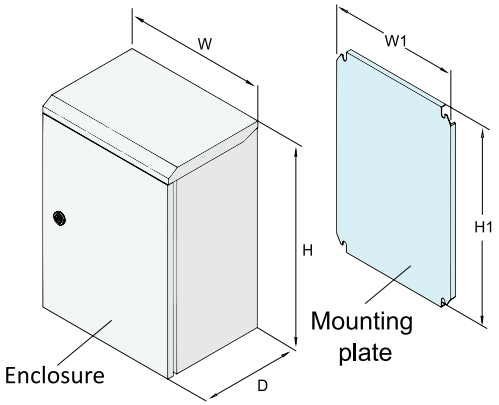

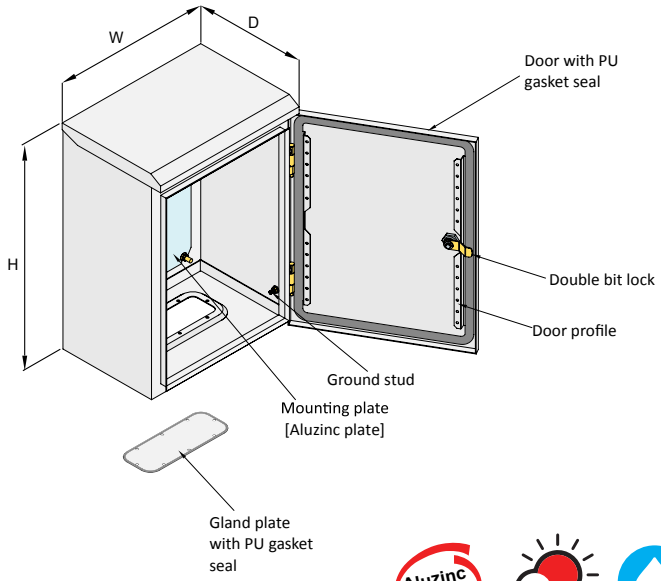

Aluzinc Plated -inside-
UV Protection Paint
IP-55

Price List

รุ่น Model	ขนาดตู้ Enclosure Dimensions			เพลทยึดอุปกรณ์ Mounting Plate (Aluzinc Plate)		จำนวนล็อค Door handle lock Qty.	น้ำหนักตู้ Approx. Weight (Kg.)	ราคาต่อหน่วย Unit Price (Baht)
	Width (W)	Height (H)	Depth (D)	Dimension (mm.) W1	H1			
CES-01	280	350	150	230	255	1	5.66	1,550.00
CES-02	300	450	150	250	355	1	7.24	1,650.00
CES-03	300	450	200	250	355	1	8.01	1,850.00
CES-04	350	450	200	300	355	1	8.94	2,050.00
CES-05	350	500	200	300	405	2	9.71	2,200.00
CES-06	400	500	200	350	405	2	10.72	2,450.00
CES-07	450	600	250	400	505	2	14.89	3,000.00
CES-08	500	600	250	450	505	2	16.11	3,500.00
CES-09	550	700	250	500	605	2	19.60	3,900.00
CES-10	630	750	250	580	655	2	23.08	4,500.00
CES-11	630	900	250	580	805	2	26.88	5,200.00
CES-12	700	1100	250	650	1005	2	40.65	8,050.00
CES-13	800	1200	300	750	1105	2	51.70	10,250.00
CES-14	900	1200	300	850	1105	2	56.92	11,250.00

Prices and availability of information are subjected to change without notice.

COMPACT ENCLOSURE: CESG IP55

CESG is a double-door enclosure with a clear glass window on the front door. It is suitable for outdoor uses. With an IP55 rating, it gives a tight protection to the electrical equipment inside the enclosure from dust and liquid. Available in 14 standard sizes.

ตู้มาตรฐานรุ่นใหม่ CESG มีหลังคาที่สามารถกันน้ำและฝุ่นได้ถึง IP-55 เหมาะสำหรับงานติดตั้ง งานกลางแจ้ง และงานภายในอาคาร ตัวตู้พ่นสี Polyester ที่สามารถกันแสง UV ได้ มาพร้อมกับแผ่นเพลทเคลือบสังกะสี ประตูหน้ามีกระจกใส เพื่อง่ายต่อการตรวจเช็คการทำงานของระบบไฟภายในตู้

Specification

Material	Electro-Galvanized Steel (EG)			Aluminium-Zinc Coated Steel (Aluzinc)
Size	Enclosure Frame	Door	Gland Plate	Mounting Plate
CESG-01 to CESG-11	1.2 mm.	1.5 mm.	1.2 mm.	1.5 mm.
CESG-12 to CESG-14	1.5 mm.	1.5 mm.	1.5 mm.	2.0 mm.
Finished Surface	Polyester powder coated with UV protecton paint RAL-7032			Aluminium-Zinc Coated Steel (Aluzinc)
Protection Rating	IP55			
Supply Include	Gland plate and Door with PU gasket seal / Double bit lock with key			

COMPACT ENCLOSURE: CESG IP55

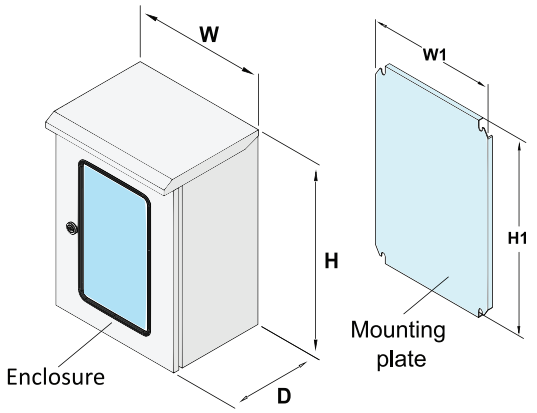

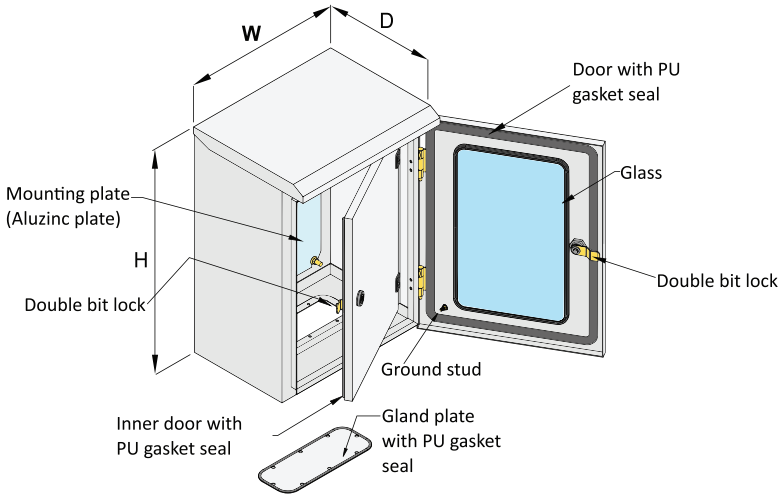

Aluzinc Plated -inside-
UV Protection Paint
IP-55

Price List

รุ่น Model	ขนาดตู้ Enclosure Dimensions			เพลทยึดอุปกรณ์ Mounting Plate (Aluzinc Plate)		จำนวนล็อค Door handle lock Qty.	น้ำหนักตู้ Approx. Weight (Kg.)	ราคาต่อหน่วย Unit Price (Baht)
	Width (W)	Height (H)	Depth (D)	Dimension (mm.) W1	H1			
CESG-01	280	350	200	230	210	1	7.64	2,450.00
CESG-02	300	450	200	250	310	1	9.87	2,750.00
CESG-03	300	450	250	250	310	1	10.65	3,050.00
CESG-04	350	450	250	300	310	1	11.83	3,250.00
CESG-05	350	500	250	300	360	2	12.92	3,500.00
CESG-06	400	500	250	350	360	2	14.21	3,900.00
CESG-07	450	600	300	400	460	2	19.41	4,400.00
CESG-08	500	600	300	450	460	2	20.96	4,700.00
CESG-09	550	700	250	500	560	2	24.41	5,500.00
CESG-10	630	750	250	580	610	2	28.86	6,550.00
CESG-11	630	900	250	580	760	2	33.93	7,600.00
CESG-12	700	1100	250	650	960	2	50.14	11,100.00
CESG-13	800	1200	300	750	1060	2	63.35	14,000.00
CESG-14	900	1200	300	850	1060	2	69.80	15,500.00

Prices and availability of information are subjected to change without notice.

COMPACT ENCLOSURE: CRS IP65

CRS IP65. Dust tight and no jets of water. With an IP65 rating, CRS series can 100% secure the enclosure from dust and water jets. Adding the slope canopy, this enclosure is most suitable for outdoor uses in any environment. Available in 5 standard sizes.

ตู้มาตรฐานรุ่นใหม่ CRS มีหลังคาลาดเอียง ซึ่งสามารถกันน้ำและฝุ่นได้ถึง IP-65 เหมาะสำหรับการใช้งานติดตั้ง และงานนอกอาคาร

Specification

Material	Electro-Galvanized Steel (EG)			Aluminium-Zinc Coated Steel (Aluzinc)
Size	Enclosure Frame	Door	Gland Plate	Mounting Plate
CRS-01 to CRS-05	1.2 mm.	1.5 mm.	1.2 mm.	1.5 mm.
Finished Surface	Polyester powder coated with UV protecton paint RAL-7032			Aluminium-Zinc Coated Steel (Aluzinc)
Protection Rating	IP65			
Supply Include	Gland plate and Door with PU gasket seal / Waterproof handle lock			

COMPACT ENCLOSURE: CRS IP65

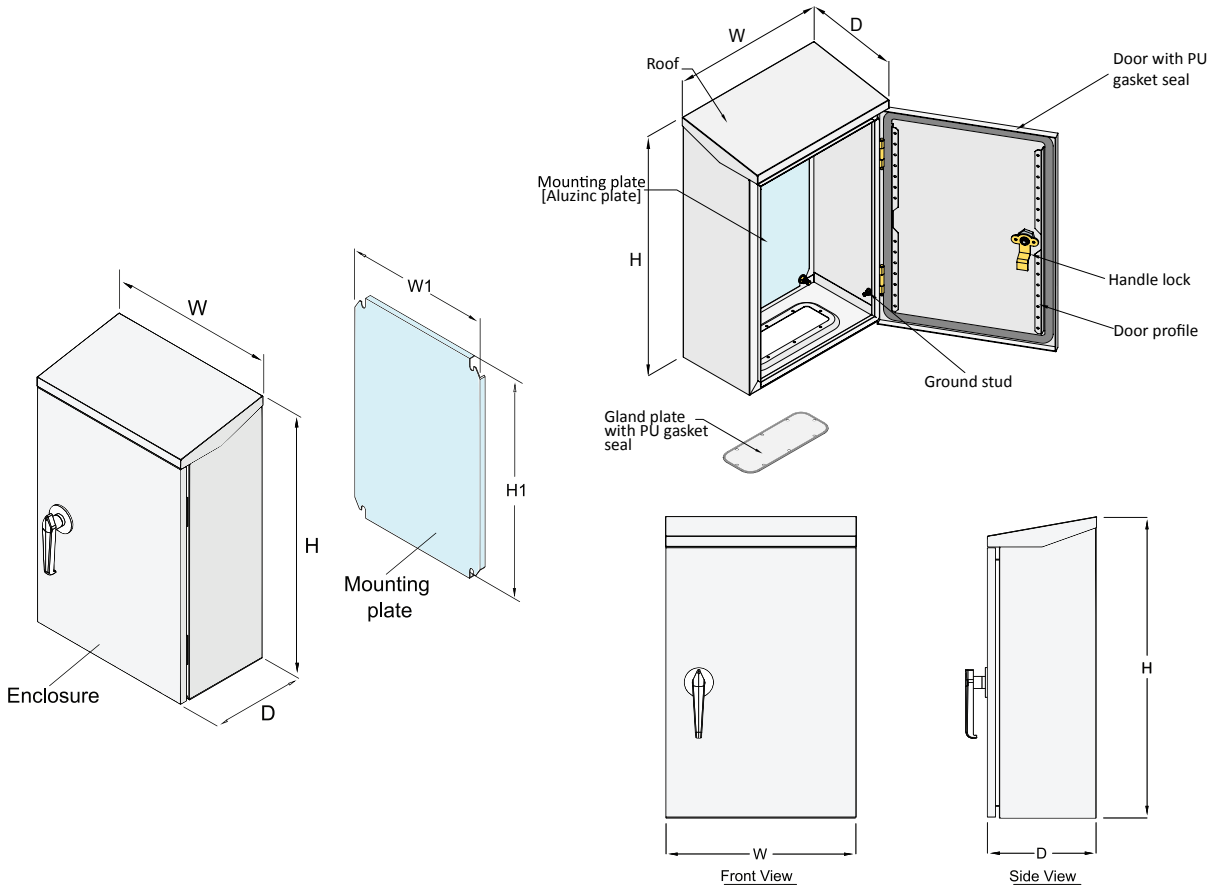

Aluzinc Plated -inside-
UV Protection Paint
IP-65

Price List

รุ่น Model	ขนาดตู้ Enclosure Dimensions			เพลทยึดอุปกรณ์ Mounting Plate (Aluzinc Plate)		จำนวนล็อค Door handle lock Qty.	น้ำหนักตู้ Approx. Weight (Kg.)	ราคาต่อหน่วย Unit Price (Baht)
	Width (W)	Height (H)	Depth (D)	Dimension (mm.) W1	H1			
CRS-01	280	405	150	230	314	1	6.28	1,900.00
CRS-02	300	505	150	250	414	1	7.89	2,000.00
CRS-03	300	505	200	250	414	1	8.69	2,200.00
CRS-04	350	505	200	300	414	1	9.71	2,300.00
CRS-05	350	555	200	300	464	1	10.49	2,500.00

Prices and availability of information are subjected to change without notice.

COMPACT ENCLOSURE: CRSG IP65

CRSG Series is similar to CRS Series, plus a double door with a clear glass window on the front door. Also available in 5 standard sizes.

ตู้มาตรฐานรุ่นใหม่ CRSG มีหลังคาลาดเอียง ซึ่งสามารถกันน้ำและฝุ่นได้ถึง IP-65 เหมาะสำหรับการใช้งานติดตั้ง และงานนอกอาคาร ประตูหน้ามีกระจกใส เพื่อง่ายต่อการตรวจเช็คการทำงานของระบบไฟภายในตู้

Specification

Material	Electro-Galvanized Steel (EG)			Aluminium-Zinc Coated Steel (Aluzinc)
Size	Enclosure Frame	Door	Gland Plate	Mounting Plate
CRSG-01 to CRSG-05	1.2 mm.	1.5 mm.	1.2 mm.	1.5 mm.
Finished Surface	Polyester powder coated with UV protecton paint RAL-7032			Aluminium-Zinc Coated Steel (Aluzinc)
Protection Rating	IP65			
Supply Include	Gland plate and Door with PU gasket seal /			Waterproof handle lock

COMPACT ENCLOSURE: CRSG IP65

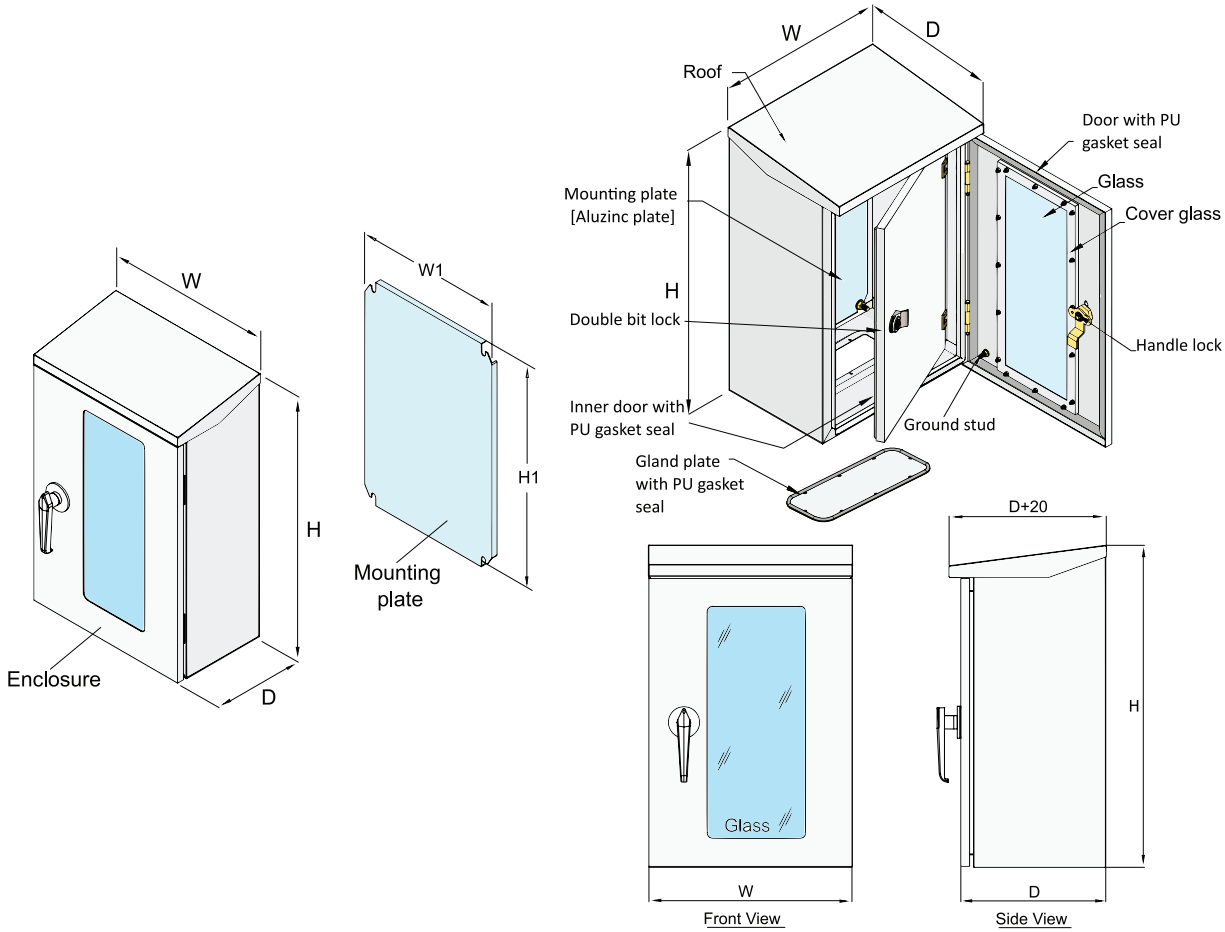

Aluzinc Plated -inside-
UV Protection Paint
IP-65

Price List

รุ่น Model	ขนาดตู้ Enclosure Dimensions			เพลทยึดอุปกรณ์ Mounting Plate (Aluzinc Plate)		จำนวนล็อค Door handle lock Qty.	น้ำหนักตู้ Approx. Weight (Kg.)	ราคาต่อหน่วย Unit Price (Baht)
	Width (W)	Height (H)	Depth (D)	Dimension (mm.) W1	H1			
CRSG-01	280	405	200	230	314	1	9.29	2,800.00
CRSG-02	300	505	200	250	414	1	11.89	3,200.00
CRSG-03	300	505	250	250	414	1	12.67	3,400.00
CRSG-04	350	505	250	300	414	1	14.20	3,600.00
CRSG-05	350	555	250	300	464	1	15.44	3,800.00

Prices and availability of information are subjected to change without notice.

COMPACT ENCLOSURE STAINLESS: CE IP55

Hygienic Designed Corner

CE-STL is a stainless-steel enclosure, with a hygienically designed door corner, that is suitable for both indoor and outdoor uses in a humid environment such as industrial food manufacturing plants or acidic areas. This enclosure is made of a high-quality stainless-steel Grade SUS304. Adding the polyurethane foam gasket to provide excellent sealing efficiency, it can secure the enclosure at IP55. Available in 14 standard sizes.

ตู้ CE สแตนเลส ออกแบบมารองรับการใช้งานในพื้นที่ที่มีความชื้น บริเวณพื้นที่ชายทะเล หรือพื้นที่ที่มีกรดหรือด่าง เช่น โรงงานอุตสาหกรรมอาหาร โรงงานอุตสาหกรรมเคมี วัสดุผลิตจากสแตนเลส SUS304 และสามารถกันน้ำและฝุ่นได้ถึง IP-55 CE สแตนเลสรุ่นนี้มีขนาดให้เลือกถึง 14 ขนาดด้วยกัน

Specification

Material	Stainless Steel Sheet SUS304			
Size	Enclosure Frame	Door	Gland Plate	Mounting Plate
CE-STL-01 to CE-STL-11	1.0 mm.	1.5 mm.	1.0 mm.	1.0 mm.
CE-STL-12 to CE-STL-14	1.5 mm.	1.5 mm.	1.5 mm.	1.5 mm.
Finished Surface	Brushed			
Protection Rating	IP55			
Supply Include	Gland plate and Door with PU gasket seal / Double bit lock with key			

Prices and availability of information are subjected to change without notice.

COMPACT ENCLOSURE STAINLESS: CE IP55

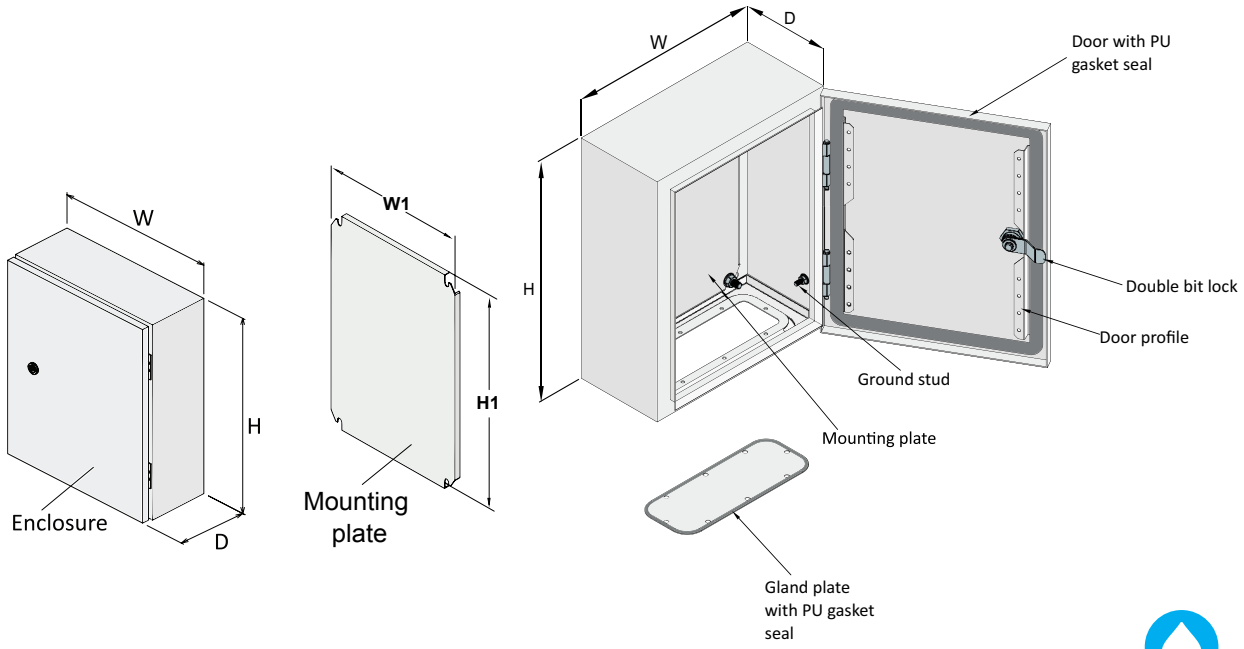

IP-55

Price List

รุ่น Model	ขนาดตู้ Enclosure Dimensions			เพลทยึดอุปกรณ์ Mounting Plate		จำนวนล็อค Door handle lock Qty.	น้ำหนักตู้ Approx. Weight (Kg.)	ราคาต่อหน่วย Unit Price (Baht)
	Width (W)	Height (H)	Depth (D)	Dimension (mm.) W1	H1			
CE-STL-01	280	350	150	220	290	1	5.32	7,500.00
CE-STL-02	300	450	150	240	390	1	6.87	8,600.00
CE-STL-03	300	450	200	240	390	1	7.55	10,500.00
CE-STL-04	350	450	200	290	390	1	8.39	11,600.00
CE-STL-05	350	500	200	290	440	2	9.16	12,500.00
CE-STL-06	400	500	200	340	440	2	10.13	13,600.00
CE-STL-07	450	600	250	390	540	2	13.77	15,800.00
CE-STL-08	500	600	250	440	540	2	14.90	17,500.00
CE-STL-09	550	700	250	490	640	2	18.42	18,600.00
CE-STL-10	630	750	250	570	690	2	21.62	19,600.00
CE-STL-11	630	900	250	570	840	2	25.26	20,700.00
CE-STL-12	700	1100	250	640	1040	2	41.86	27,500.00
CE-STL-13	800	1200	300	740	1140	2	55.80	34,000.00
CE-STL-14	900	1200	300	840	1140	2	61.02	36,750.00

 Prices and availability of information are subjected to change without notice.

COMPACT ENCLOSURE STAINLESS: CES IP55

Hygienic Designed Corner

CES-STL IP55. This compact enclosure comes with a canopy that provides extra prevention from the ingress of water spray. This series is suitable for outdoor purposes. It is made of stainless-steel Grade SUS304 which can endure the high humidity environment. Available in 14 standard sizes.

ตู้ CES สแตนเลส ออกแบบมารองรับการใช้งานบริเวณกลางแจ้ง และภายนอกอาคาร วัสดุผลิตจากสแตนเลส SUS304 และสามารถกันน้ำและฝุ่นได้ถึง IP-55

Specification

Material	Stainless Steel Sheet SUS304			
Size	Enclosure Frame	Door	Gland Plate	Mounting Plate
CES-STL-01 to CES-STL-14	1.5 mm.	1.5 mm.	1.5 mm.	1.5 mm.
Finished Surface	Brushed			
Protection Rating	IP55			
Supply Include	Gland plate and Door with PU gasket seal / Double bit lock with key			

COMPACT ENCLOSURE STAINLESS: CES IP55

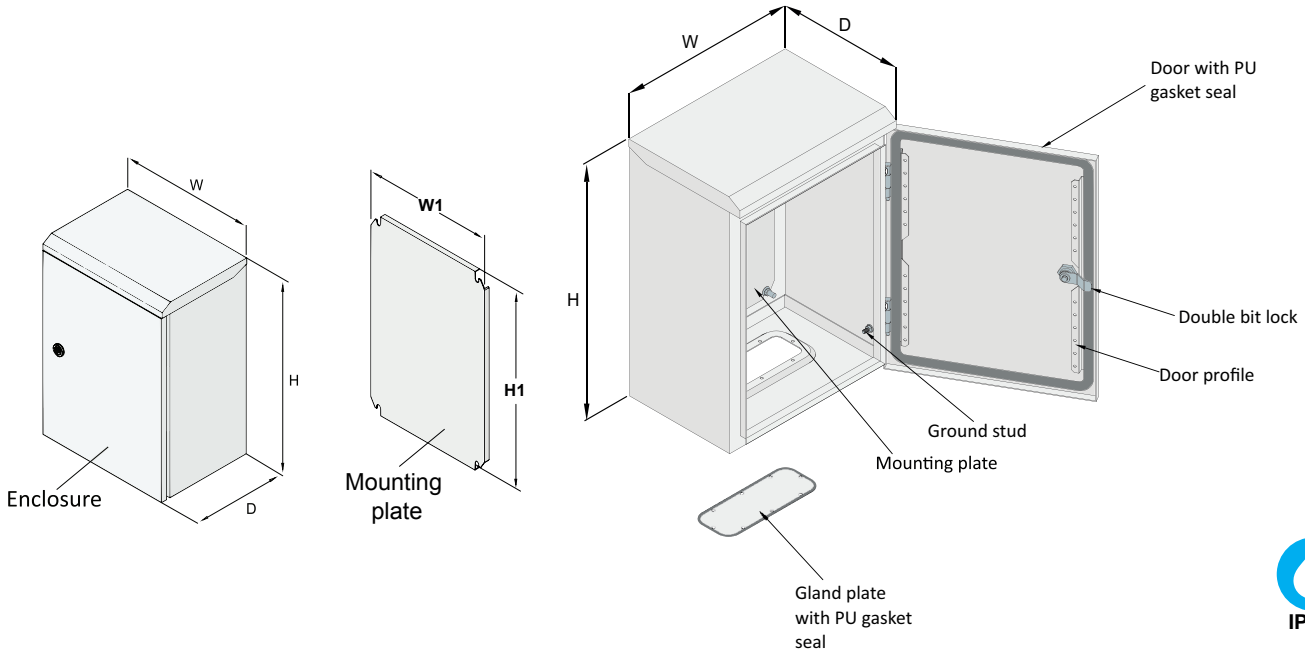

Price List

รุ่น Model	ขนาดตู้ Enclosure Dimensions			เพลทยึดอุปกรณ์ Mounting Plate		จำนวนล็อค Door handle lock Qty.	น้ำหนักตู้ Approx. Weight (Kg.)	ราคาต่อหน่วย Unit Price (Baht)
	Width (W)	Height (H)	Depth (D)	Dimension (mm.) W1	H1			
CES-STL-01	280	350	150	220	255	1	7.81	8,800.00
CES-STL-02	300	450	150	240	355	1	9.95	10,500.00
CES-STL-03	300	450	200	240	355	1	11.05	12,500.00
CES-STL-04	350	450	200	290	355	1	12.33	13,500.00
CES-STL-05	350	500	200	290	405	2	13.43	14,500.00
CES-STL-06	400	500	200	340	405	2	14.77	15,500.00
CES-STL-07	450	600	250	390	505	2	20.20	17,500.00
CES-STL-08	500	600	250	440	505	2	21.87	19,500.00
CES-STL-09	550	700	250	490	605	2	26.84	20,500.00
CES-STL-10	630	750	250	570	655	2	31.45	21,500.00
CES-STL-11	630	900	250	570	805	2	36.54	22,500.00
CES-STL-12	700	1100	250	640	1005	2	46.35	29,200.00
CES-STL-13	800	1200	300	740	1105	2	61.27	36,000.00
CES-STL-14	900	1200	300	840	1105	2	67.17	39,000.00

COMPACT ENCLOSURE STAINLESS: CESG IP55

Hygienic Designed Corner

CESG-STL has a double door, a canopy, and a glass window on the front door. The enclosure is made of stainless-steel Grade SUS304 which can endure the high humidity environment. The enclosure is suitable for outdoor purposes. Available in 14 standard sizes.

ตู้ CESG สแตนเลส เป็นตู้ประตูสองชั้น และมีกระจกหน้าตู้ ที่ออกแบบมารองรับการใช้งานบริเวณกลางแจ้ง และภายนอกอาคาร วัสดุผลิตจากสแตนเลส SUS304 และสามารถกันน้ำและฝุ่นได้ถึง IP-55

Specification

Material	Stainless Steel Sheet SUS304			
Size	Enclosure Frame	Door	Gland Plate	Mounting Plate
CESG-STL-01 to CESG-STL-14	1.5 mm.	1.5 mm.	1.5 mm.	1.5 mm.
Finished Surface	Brushed			
Protection Rating	IP55			
Supply Include	Gland plate and Door with PU gasket seal / Double bit lock with key			

COMPACT ENCLOSURE STAINLESS: CESG IP55

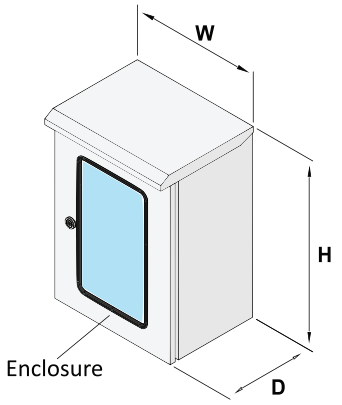

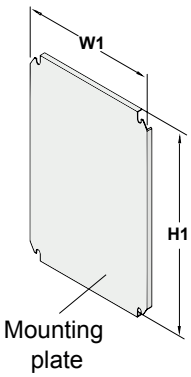

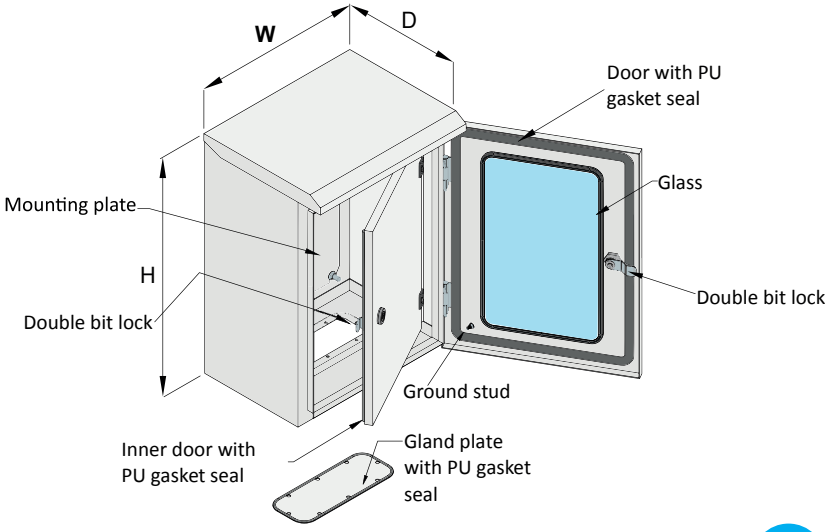

IP-55

Price List

รุ่น Model	ขนาดตู้ Enclosure Dimensions			เพลทยึดอุปกรณ์ Mounting Plate		จำนวนล็อค Door handle lock Qty.	น้ำหนักตู้ Approx. Weight (Kg.)	ราคาต่อหน่วย Unit Price (Baht)
	Width (W)	Height (H)	Depth (D)	Dimension (mm.) W1	H1			
CESG-STL-01	280	350	200	205	210	1	9.68	10,500.00
CESG-STL-02	300	450	200	225	310	1	12.48	12,500.00
CESG-STL-03	300	450	250	225	310	1	13.58	14,500.00
CESG-STL-04	350	450	250	275	310	1	15.21	15,500.00
CESG-STL-05	350	500	250	275	360	2	16.63	16,500.00
CESG-STL-06	400	500	250	325	360	2	18.41	17,600.00
CESG-STL-07	450	600	300	375	460	2	24.93	20,500.00
CESG-STL-08	500	600	300	425	460	2	27.07	22,500.00
CESG-STL-09	550	700	250	475	560	2	33.33	23,600.00
CESG-STL-10	630	750	250	555	610	2	39.27	24,500.00
CESG-STL-11	630	900	250	555	760	2	45.77	25,600.00
CESG-STL-12	700	1100	250	625	960	2	58.23	32,600.00
CESG-STL-13	800	1200	300	725	1060	2	76.63	40,000.00
CESG-STL-14	900	1200	300	825	1060	2	84.07	43,000.00

ประเภทอุปกรณ์เสริม Accessories Type	รายละเอียดสินค้า Product Description	ราคาต่อหน่วย Unit Price
	กุญแจเหลี่ยม TAMCO (TAMCO Square Cylinder Lock) Model: TAMLSQ-001 Material and finish: zinc alloy chromed handle and housing, steel cam Application: cam quarter-turn to open or close, with function of locking IP Rating: IP55	**110.00 Baht**
	กุญแจเหลี่ยมสีดำ (Black Square Cylinder Lock) Model: TAMLSQ-004 Material and finish: black powder coated ZDC housing and insert, white zinc plated steel cam Application: cam quarter-turn to open or close, with function of locking (Double Bit Lock) IP Rating: IP54	**300.00 Baht**
	กุญแจกลมบิดสีดำ (Black Round Cylinder Lock) Model: TAMLRD-002 Material and finish: black coated zinc alloy housing, and white zinc plated steel cam Application: cam quarter-turn for opening or closing IP Rating: IP65	**250.00 Baht**
	กุญแจกลม (Silver Round Cylinder Lock) Model: TAMLRD-003 Material and finish: zinc alloy chromed, steel cam Application: cam quarter-turn for opening or closing IP Rating: IP65	**110.00 Baht**
	กุญแจกลมสีดำ (Black Round Cylinder Lock) Model: TAMLRD-004 Material and finish: black coated zinc alloy housing and white zinc plated steel cam Application: cam quarter-turn for opening or closing IP Rating: IP54	**150.00 Baht**
	กุญแจหูกระเป๋าเหล็ก (Toggle and Hook Lock) Model: TAMLSW-010 Material and finish: metal chromed housing	**60.00 Baht**

ประเภทอุปกรณ์เสริม Accessories Type	รายละเอียดสินค้า Product Description	ราคาต่อหน่วย Unit Price
	กุญแจหูกระเป๋าสแตนเลสขนาดเล็ก (Small Stainless Toggle and Hook Lock) Model: TAMLSW-011 Material and finish: stainless steel (SUS304), brushed	**120.00 Baht**
	กุญแจหูกระเป๋าสแตนเลสขนาดเล็ก แบบมีสปริง (Small Stainless Toggle and Hook Lock with Spring) Model: TAMLSW-012 Material and finish: stainless steel (SUS304), brushed Brand: TAKIGEN	**800.00 Baht**
	กุญแจหูกระเป๋าสแตนเลสขนาดใหญ่ แบบมีสปริง (Large Stainless Toggle and Hook Lock with Spring) Model: TAMLSW-013 Material and finish: stainless steel (SUS304), brushed Brand: TAKIGEN	**1,000.00 Baht**
	กุญแจหูกระเป๋าเหล็กขนาดใหญ่ แบบมีสปริง (Large Steel Toggle and Hook Lock with Spring) Model: TAMLSW-015 Material and finish: steel, chromed Brand: TAKIGEN	**650.00 Baht**
	กุญแจหูกระเป๋าเหล็กขนาดเล็ก แบบมีสปริง (Small Steel Toggle and Hook Lock with Spring) Model: TAMLSW-017 Material and finish: steel, chromed Brand: TAKIGEN	**400.00 Baht**
	กุญแจคอนโทรลสีเงิน ขนาดเล็ก (Silver Small Control Lock) Model: TAMLSW-006 Material and finish: silver coated with zinc alloy housing Application: handle quarter-turn to open or close IP Rating: IP40	**250.00 Baht**

Prices and availability of information are subjected to change without notice.

ประเภทอุปกรณ์เสริม Accessories Type	รายละเอียดสินค้า Product Description	ราคาต่อหน่วย Unit Price
	กุญแจคอนโทรลสีดำ ขนาดเล็ก (Black Small Control Lock) Model: TAMLSW-007 Material and finish: black coated with zinc alloy housing Application: handle quarter-turn to open or close IP Rating: IP40	**250.00 Baht**
	กุญแจคอนโทรลสีดำ (Black Control Lock) Model: TAMLSW-035 Material and finish: zinc die housing, Black powder coated Application: handle quarter-turn combines with rod latch system to open or close IP Rating: IP65	**1,200.00 Baht**
	กุญแจคอนโทรลสีเงิน (Silver Control Lock) Model: TAMLSW-022 Material and finish: silver coated with zinc alloy housing Application: handle quarter-turn to open or close IP Rating: IP40	**700.00 Baht**
	กุญแจคอนโทรลสีเงิน (Silver Rod Control Lock) Model: TAMLSW-054 Material and finish: zinc alloy chromed housing Application: 90° rotation of the back drive the gear box to lock and unlock IP Rating: IP55	**3,000.00 Baht**
	กุญแจเขาควายกันน้ำ (Waterproof Handle Lock) Model: TAMLSW-008 Material and finish: zinc alloy chromed housing Application: handle quarter-turn to open or close IP Rating: IP65	**500.00 Baht**
	กุญแจเขาควายกันน้ำ (Waterproof Handle Lock) Model: TAMLSW-019 Material and finish: zinc alloy chromed handle and housing, steel cam IP Rating: IP65 Brand: TAKIGEN	**2,000.00 Baht**

ประเภทอุปกรณ์เสริม Accessories Type	รายละเอียดสินค้า Product Description	ราคาต่อหน่วย Unit Price
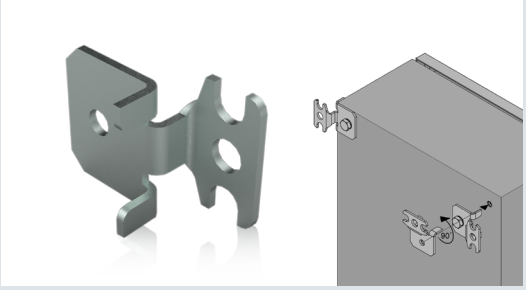	ซัพพอร์ตยึดผนัง (Wall Mounting Kits) Model: TAMWMK-001 Material and finish: Posmac steel (2.5mm.) Application: enclosure's accessories for wall mounting function. Designed for 90° adjustable, which suits for both vertical and horizontal installation. (Load limit: 200Kg.) Pack of: 4 pc (s). Supply include: 4 sets of M8x20L white zinc screws	**200.00 Baht**
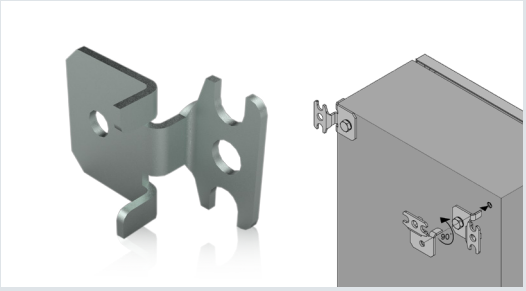	ซัพพอร์ตยึดผนังสแตนเลส (Stainless Wall Mounting Kits) Model: TAMWMK-002 Material and finish: stainless steel SUS304 (2.5mm.), brushed Application: enclosure's accessories for wall mounting function. Designed for 90° adjustable, which suits for both vertical and horizontal installation. (Load limit: 200Kg.) Pack of: 4 pc (s). Supply include: 4 sets of M8x20L stainless steel SUS304 screws	**625.00 Baht**
	ฝาพลาสติกยึดกุญแจ (Pull Handle for Lock) Model: TAMACO-001 Material and finish: black PA polyamide nylon Application: for easy opening of the door panel	**20.00 Baht**
	ฝาพลาสติกครอบกุญแจ (Black Plastic Cover for Lock) Model: TAMACO-002 Material and finish: black PA polyamide nylon Application: waterproof for lock	**20.00 Baht**
	บานพับ MDB (Hinge for MDB) Model: TAMAHI-001 Material and finish: zinc alloy hinge, galvanized steel pin Application: opening angle 110°	**250.00 Baht**
	บานพับประตู (Door Stay) Model: TAMAHI-002 Material and finish: galvanized steel Application: door stop	**500.00 Baht**

Prices and availability of information are subjected to change without notice.

ประเภทอุปกรณ์เสริม Accessories Type	รายละเอียดสินค้า Product Description	ราคาต่อหน่วย Unit Price
	บานพับประตูซ้าย (LH Door Stay) Model: TAMAHI-003 Material and finish: galvanized steel Application: door stop	**200.00 Baht**
	บานพับประตูขวา (RH Door Stay) Model: TAMAHI-004 Material and finish: galvanized steel Application: door stop	**200.00 Baht**
	มือจับชุบโครเมียม (Chromed Steel Handle) Model: TAMAHN-001 Material and finish: chromed steel	**200.00 Baht**
	มือจับพลาสติกสีดำ (Black Plastic Handle) Model: TAMAHN-002 Material and finish: black ABS (Acrylonitrile butadiene styrene)	**150.00 Baht**
	ลูกกุญแจสั้น (Short Key) Model: TAMAKY-001 Material and finish: zinc alloy, chromed	**30.00 Baht**
	ลูกกุญแจยาว (Long Key) Model: TAMAKY-002 Material and finish: zinc alloy	**50.00 Baht**

ประเภทอุปกรณ์เสริม Accessories Type	รายละเอียดสินค้า Product Description	ราคาต่อหน่วย Unit Price
RAL7032	สีสเปรย์สำหรับงานซ่อมงานสีตู้ (Spray Color for Repairing the Enclosure Color) Model: TAMCO #8133 (RAL7032) Color : cream	**250.00 Baht**
RAL7035	สีสเปรย์สำหรับงานซ่อมงานสีตู้ (Spray Color for Repairing the Enclosure Color) Model: TAMCO #9015 (RAL7035) Color : light gray	**280.00 Baht**
TAMCO #9014	สีสเปรย์สำหรับงานซ่อมงานสีตู้ (Spray Color for Repairing the Enclosure Color) Model: TAMCO #9014 Color : gray	**250.00 Baht**
	โฟมยางขอบประตู (Polyurethane Gasket Foam) Pack Size: depends on the requirement, unit: meter	**130.00 Baht/ Meter**
	Model: VF-130 (Fan + Filter Mask set) Air Volume: 25 CFM. Noise Level: 47-53 dB (A) Fan Voltage: 220V. AC 50 Hz. Power/Current: 16 Watt/0.13 Amp. Front Dimension: 150 x 150 mm. * Additional filter will cost 400.00 Baht	**1,080.00 Baht**
	Model: VF-255 (Fan + Filter Mask set) Air Volume: 120 CFM. Noise Level: 58 dB (A) Fan Voltage: 220V. AC 50 Hz. Power/Current: 4.0 Watt/0.3 Amp. Front Dimension: 255 x 255 mm. * Additional filter will cost 800.00 Baht	**1,980.00 Baht**

Prices and availability of information are subjected to change without notice.

Product Group		CE Series	ME Series
Product Name		Compact Enclosure	Modular Free-standing Enclosure
Product Descriptions		Small to large compact enclosure that comes with 14 different sizes. Suitable for both indoor and outdoor uses.	Knock-down enclosure with flexible solutions. Available in 7 sizes. Suitable for both indoor and outdoor uses.
Material	Steel (EG)	•	•
	Stainless Steel	•	
	Steel (Hot-rolled)		
	Steel (Cold-rolled)		
Coating	Hot-dip galvanized Polyester powder paint	•	•
IP rating	IP40	•	•
	IP55	•	•
	IP65	•	
Made-to-order options Customized in sizes, materials, cut-outs, color		Available	Available

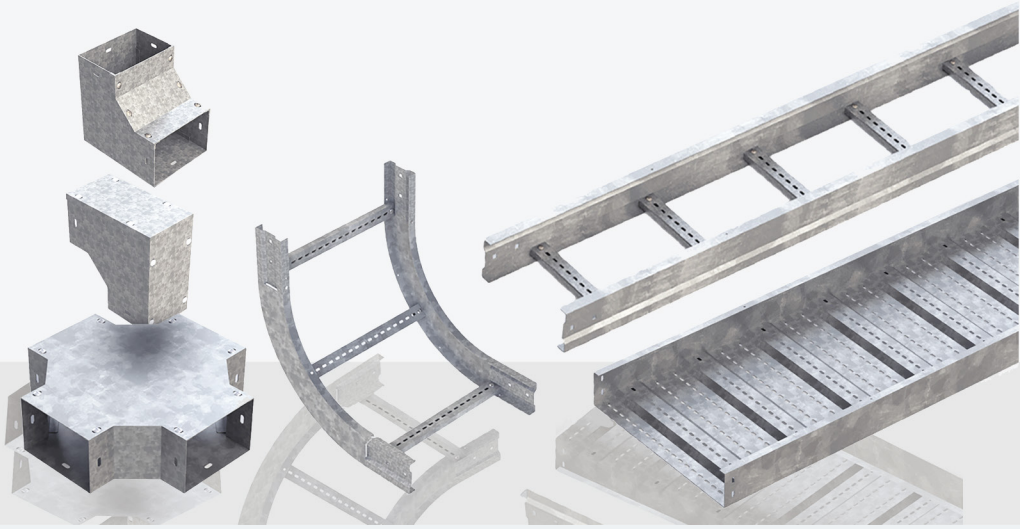

CD Series	Trunking system		
Control Desk	**Wire way**	**Cable Ladder**	**Cable Tray**
This series is designed for controlling machinery system, electronics and communication devices.	Suitable for indoor electrical system installation. Coated with polyester powder paint.	Suitable for both indoor and outdoor electrical system installation. Coated with Hot-dip galvanized process or polyester powder paint.	Suitable for indoor electrical installation that needs special strength which can carry up to 600Kg. Coated with polyester powder paint or hot-dip galvanized.
•			
•	•	•	•
		•	•
	•		
	•	•	•
•	•	•	•
•			
Available	**Available**	**Available**	**Available**

Accessories

TAMCO Racking System is designed to facilitate the maximum number of pallets in a given space and provide 100% accessibility. Manufactured from the hot rolled steel, the strength and quality are guaranteed.

Types of racking system :

- Micro Racking system
- Medium Racking system
- Selective Racking system
- Drive-in Racking system
- Cantilever Racking system
- VNA Racking system
- Push-Back Racking system
- Slide Racking system
- Mezzanine Floor Racking system
- Flow Racking system

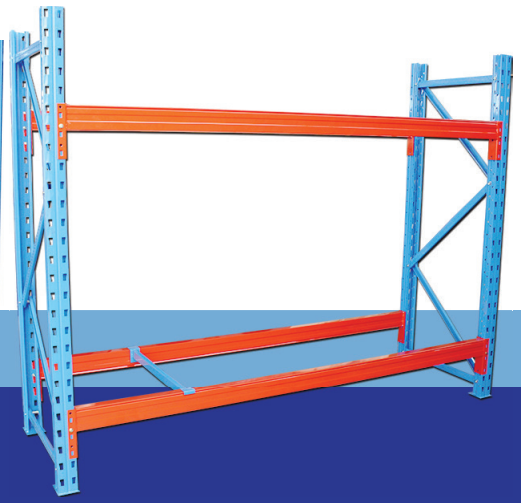

Our Technology Partner

SIVACON S8 Low-Voltage Switchboard

Technical Data

Standards and approvals		
Standards and prescriptions	Power switchgear and controlgear assembly (design verification)	IEC 61439-2
	Testing under conditions of arcing due to internal fault	IEC/TR 61641
	Induced vibrations	IEC 60068-3-3 IEC 60068-2-6 IEC 60068-2-57 IEC 60980 KTA 2201.4 Uniform Building Code (UBC), Edition 1997 Vol. 2, Ch. 19, Div. IV
	Protection against electric shock	EN 50274
Approvals and certifications	Europe Russia, Belarus, Kazakhstan China	CE Marking and EC Declaration of Conformity EAC (Eurasian Conformity) CCC
	Det Norske Veritas Lloyds Register of Shipping	DNV GL Type Approval Certificate LR Type Approval Certificate
	Shell Conformity	"DEP Shell"
Rated operational voltage (U_e)	Main circuit	Up to 690 V (rated frequency f_n 50 Hz)
Clearances and creepage distances	Rated impulse withstand voltage (U_{imp})	8 kV
	Rated insulation voltage (U_i)	1,000 V
	Degree of pollution	3
Main busbars, horizontal	Rated current	Up to 7,010 A
	Rated peak withstand current (I_{pk})	Up to 330 kA
	Rated short-time withstand current (I_{cw})	Up to 150 kA, 1 s
Rated currents of devices	Circuit breakers	Up to 6,300 A
	Cable feeders	Up to 630 A
	Motor feeders	Up to 250 kW
Internal separation	IEC 61439-2	Form 1 to form 4
	BS EN 61439-2	Up to form 4 type 7
IP degree of protection	In accordance with IEC 60529	Ventilated up to IP43 Non-ventilated IP54
Mechanical strength	IEC 62262	Up to IK10
Dimensions	Height (without base)	2,000, 2,200 mm
	Height of base (optional)	100, 200 mm
	Cubicle width	200, 350, 400, 600, 800, 850, 1,000, 1,200, 1,400 mm
	Depth (single front)	500, 600, 800, 1,000, 1,200 mm
Installation conditions	Indoor installation, ambient air temperature in the 24-h mean	+ 35°C (-5°C to + 40°C)

SIMOPRIME Medium-Voltage Switchgear

Technical Data

Ratings

Electrical data (maximum values) of SIMOPRIME

Ratings	Rated values (max.)
Switchgear up to 7.2 kV	
Rated voltage	7.2 kV
Rated frequency	50/60 Hz
Rated short-duration power-frequency withstand voltage	20 kV [1)]
Rated lightning impulse withstand voltage	60 kV
Rated short-time withstand current, 3 s	40 kA
Rated peak withstand current at 50/60 Hz	100/104 kA
Rated short-circuit breaking current	40 kA
Rated short-circuit making current at 50/60 Hz	100/104 kA
Rated normal current of busbar	3600 A
Rated normal current of feeders – with circuit-breaker – with vacuum contactor	 3600 A 400 A [2)]
Switchgear 12 kV	
Rated voltage	12 kV
Rated frequency	50/60 Hz
Rated short-duration power-frequency withstand voltage	28 kV [1)]
Rated lightning impulse withstand voltage	75 kV [3)]
Rated short-time withstand current, 3 s	40 kA
Rated peak withstand current at 50/60 Hz	100/104 kA
Rated short-circuit breaking current	40 kA
Rated short-circuit making current at 50/60 Hz	100/104 kA
Rated normal current of busbar	3600 A
Rated normal current of feeders – with circuit-breaker – with vacuum contactor	 3600 A 400 A [2)]

Ratings	Rated values (max.)
Switchgear 15 kV	
Rated voltage	15 kV
Rated frequency	50/60 Hz
Rated short-duration power-frequency withstand voltage	35 kV
Rated lightning impulse withstand voltage	95 kV
Rated short-time withstand current, 3 s	40 kA
Rated peak withstand current at 50/60 Hz	100/104 kA
Rated short-circuit breaking current	40 kA
Rated short-circuit making current at 50/60 Hz	100/104 kA
Rated normal current of busbar	3600 A
Rated normal current of feeders – with circuit-breaker	 3600 A
Switchgear 17.5 kV	
Rated voltage	17.5 kV
Rated frequency	50/60 Hz
Rated short-duration power-frequency withstand voltage	38 kV
Rated lightning impulse withstand voltage	95 kV
Rated short-time withstand current, 3 s	40 kA
Rated peak withstand current at 50/60 Hz	100/104 kA
Rated short-circuit breaking current	40 kA
Rated short-circuit making current at 50/60 Hz	100/104 kA
Rated normal current of busbar	3600 A
Rated normal current of feeders – with circuit-breaker	 3600 A

Distributed by :